Building Blocks:
Tri-State Buffer
Decoder
Encoder

Tri-State (Output Enable) Gate

- **Tri-State (Three-State) Inverter:**
  - The output is the NOT of input if the Enable input is HIGH
  - Else output is Hi-Impedance (Hi-Z)
    - Unconnected

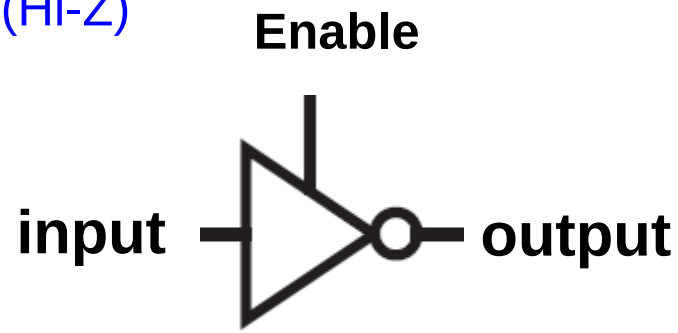

- **Tri-State Buffer:**

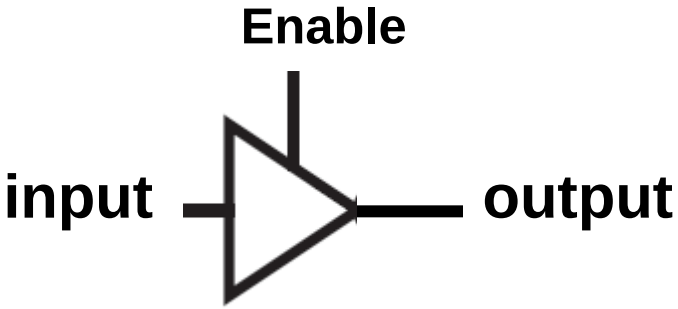

Active Low Input

- **Tri-State Buffer with Active Low Enable:**

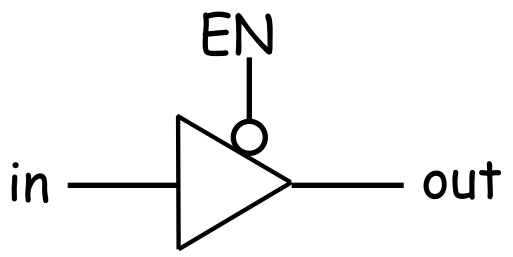

Tri-state BUF, EN low

- **Tri-State Inverter with Active Low Enable:**

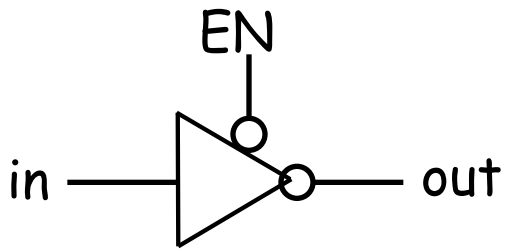

Tri-state INV, EN low

Decoder Description

- **Binary decoder is a very common combinational circuit used as a building block for:**
  - Implementing general logic
  - Making larger circuits such as Read-Only Memories (ROM)
  - Steering logic in large designs (also called glue logic)
  - Can be found in n-to-2^n denominations
    - e.g., 2-to-4, 3-to-8, etc.
  - For simplicity, will be called “decoder”

A 3-to-8 Decoder

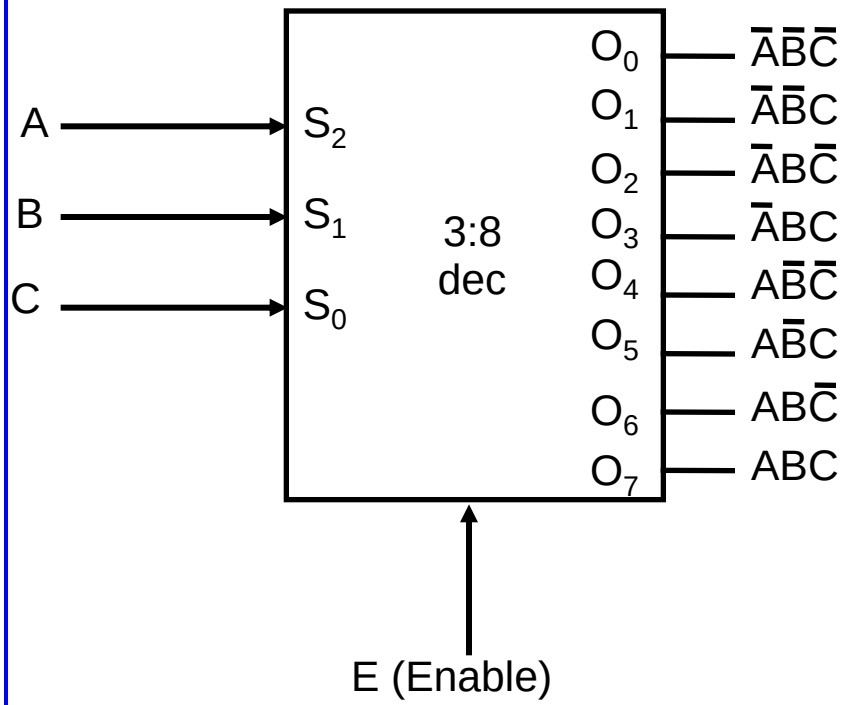

E	A	B	C	O_0	O_1	O_2	O_3	O_4	O_5	O_6	O_7
0	X	X	X	0	0	0	0	0	0	0	0
1	0	0	0	1	0	0	0	0	0	0	0
1	0	0	1	0	1	0	0	0	0	0	0
1	0	1	0	0	0	1	0	0	0	0	0
1	0	1	1	0	0	0	1	0	0	0	0
1	1	0	0	0	0	0	0	1	0	0	0
1	1	0	1	0	0	0	0	0	1	0	0
1	1	1	0	0	0	0	0	0	0	1	0
1	1	1	1	0	0	0	0	0	0	0	1

- Each decoder output is a minterm:
- <u>Any</u> combinational circuit can be constructed using decoders and OR gates

Decoder Internal Circuit

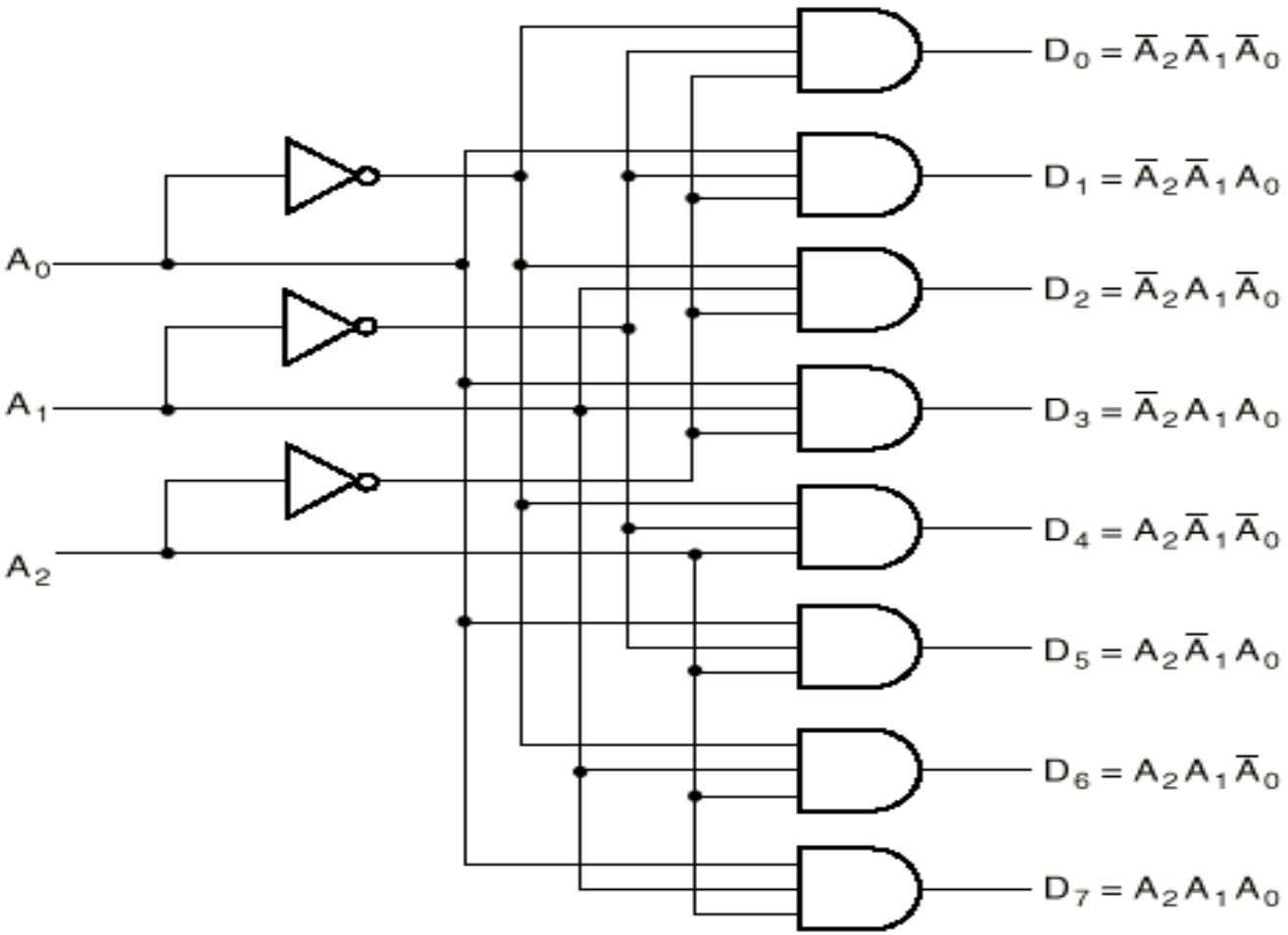

Design Using Decoder

- **Basic Idea:**
  - A decoder can be used to implement any combinational circuit (reminder: each decoder output is a minterm)

- **Example:**

F1 = A' B C' D + A' B' C D + A B C D
F2 = A B C' D' + A B C
F3 = A' + B' + C' + D'

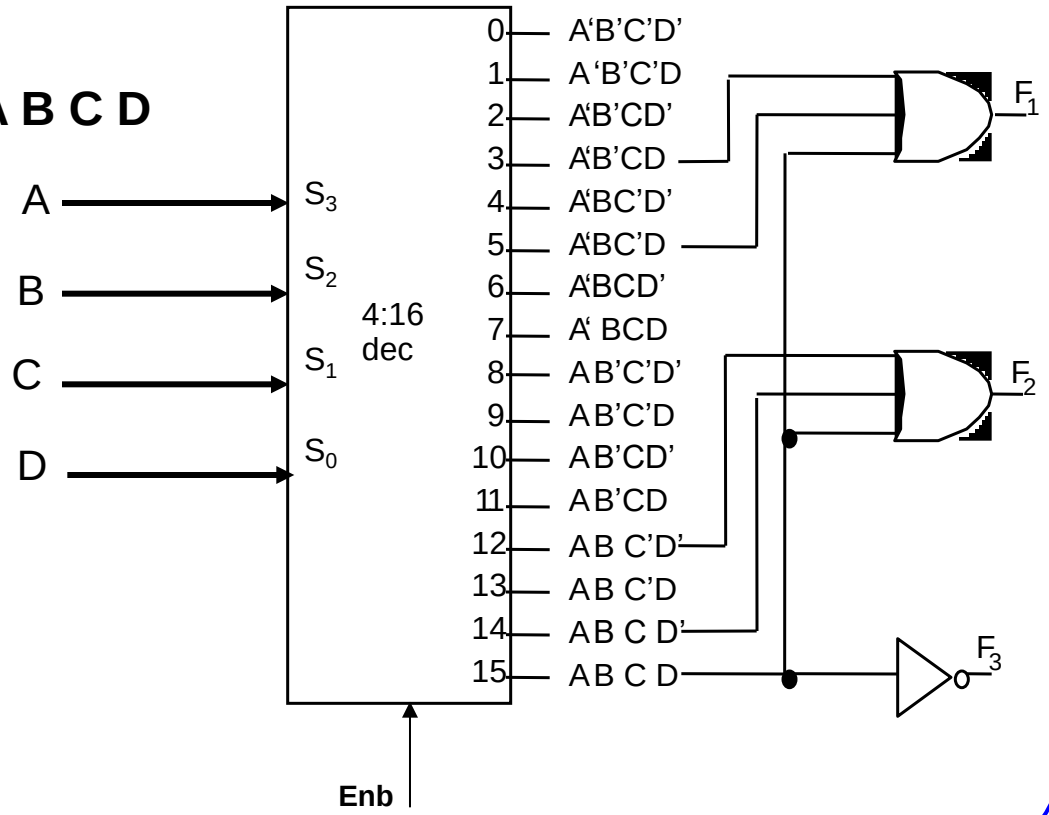

Inputs/Outputs Can Be Active Low

- **Decoder with**
  - Active Low Enable
  - Active Low Outputs

G	A	B	Y_0	Y_1	Y_2	Y_3
1	X	X	1	1	1	1
0	0	0	0	1	1	1
0	0	1	1	0	1	1
0	1	0	1	1	0	1
0	1	1	1	1	1	0

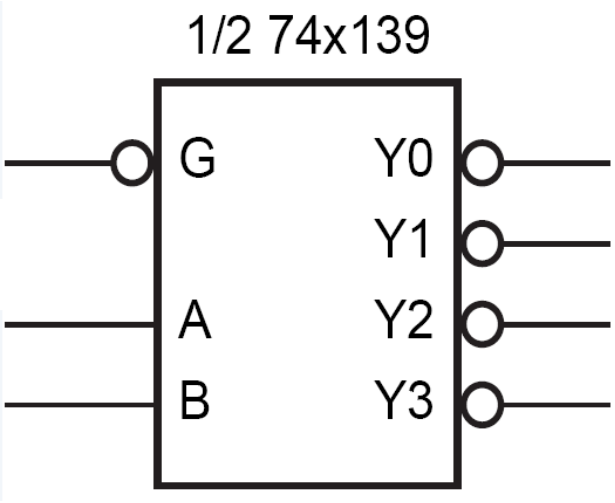

74x139 dual 2-to-4 decoder

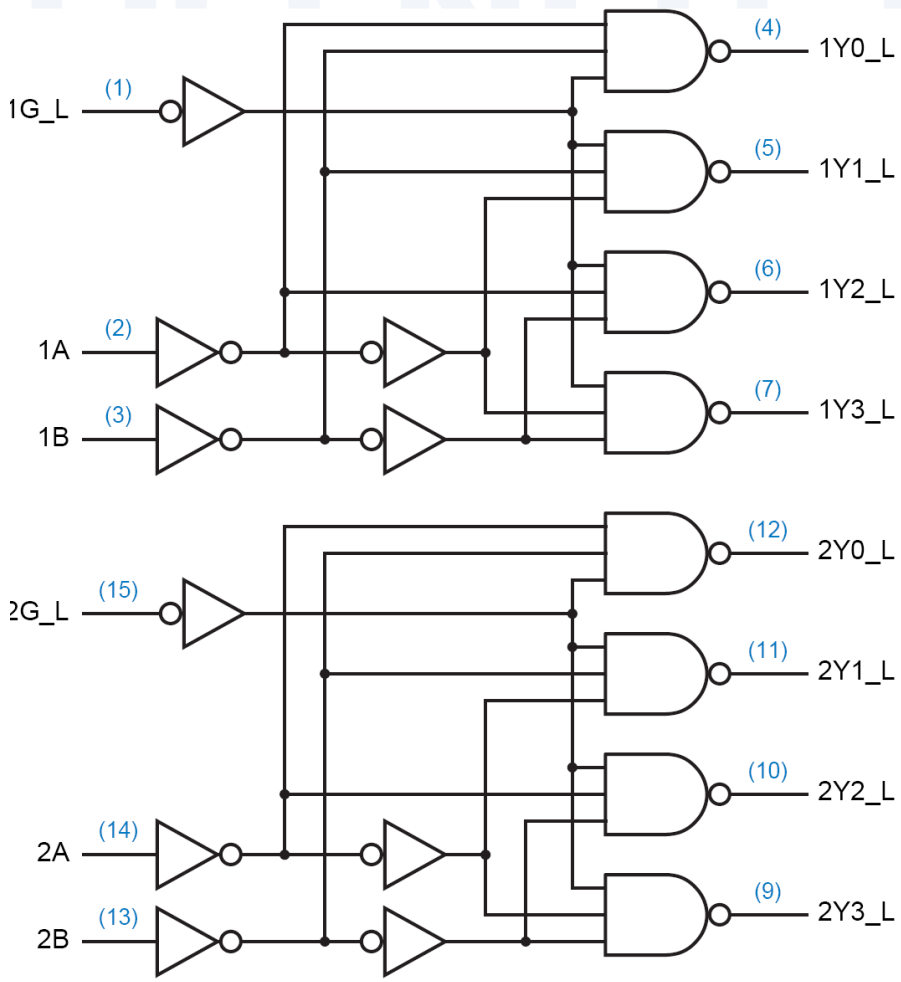

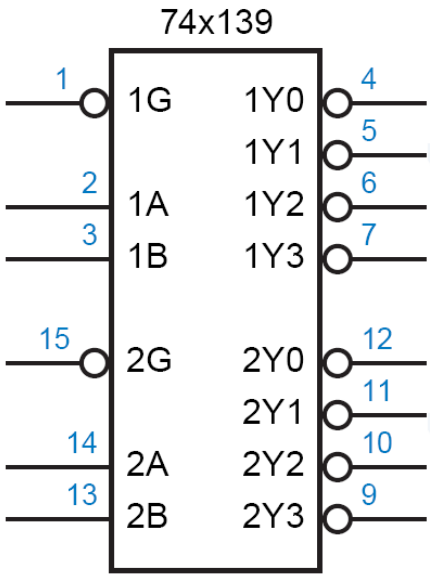

Inputs			Outputs			
G_L	B	A	Y3_L	Y2_L	Y1_L	Y0_L
1	x	x	1	1	1	1
0	0	0	1	1	1	0
0	0	1	1	1	0	1
0	1	0	1	0	1	1
0	1	1	0	1	1	1

COPY COPY

74x138 3-8 Decoder

(b)

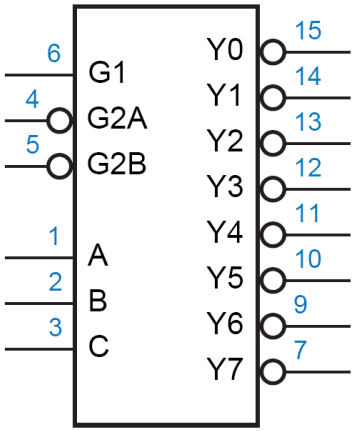

Inputs						*Outputs*							
G1	G2A_L	G2B_L	C	B	A	Y7_L	Y6_L	Y5_L	Y4_L	Y3_L	Y2_L	Y1_L	Y0_L
0	x	x	x	x	x	1	1	1	1	1	1	1	1
x	1	x	x	x	x	1	1	1	1	1	1	1	1
x	x	1	x	x	x	1	1	1	1	1	1	1	1
1	0	0	0	0	0	1	1	1	1	1	1	1	0
1	0	0	0	0	1	1	1	1	1	1	1	0	1
1	0	0	0	1	0	1	1	1	1	1	0	1	1
1	0	0	0	1	1	1	1	1	1	0	1	1	1
1	0	0	1	0	0	1	1	1	0	1	1	1	1
1	0	0	1	0	1	1	1	0	1	1	1	1	1
1	0	0	1	1	0	1	0	1	1	1	1	1	1
1	0	0	1	1	1	0	1	1	1	1	1	1	1

74x138 3-8 Decoder

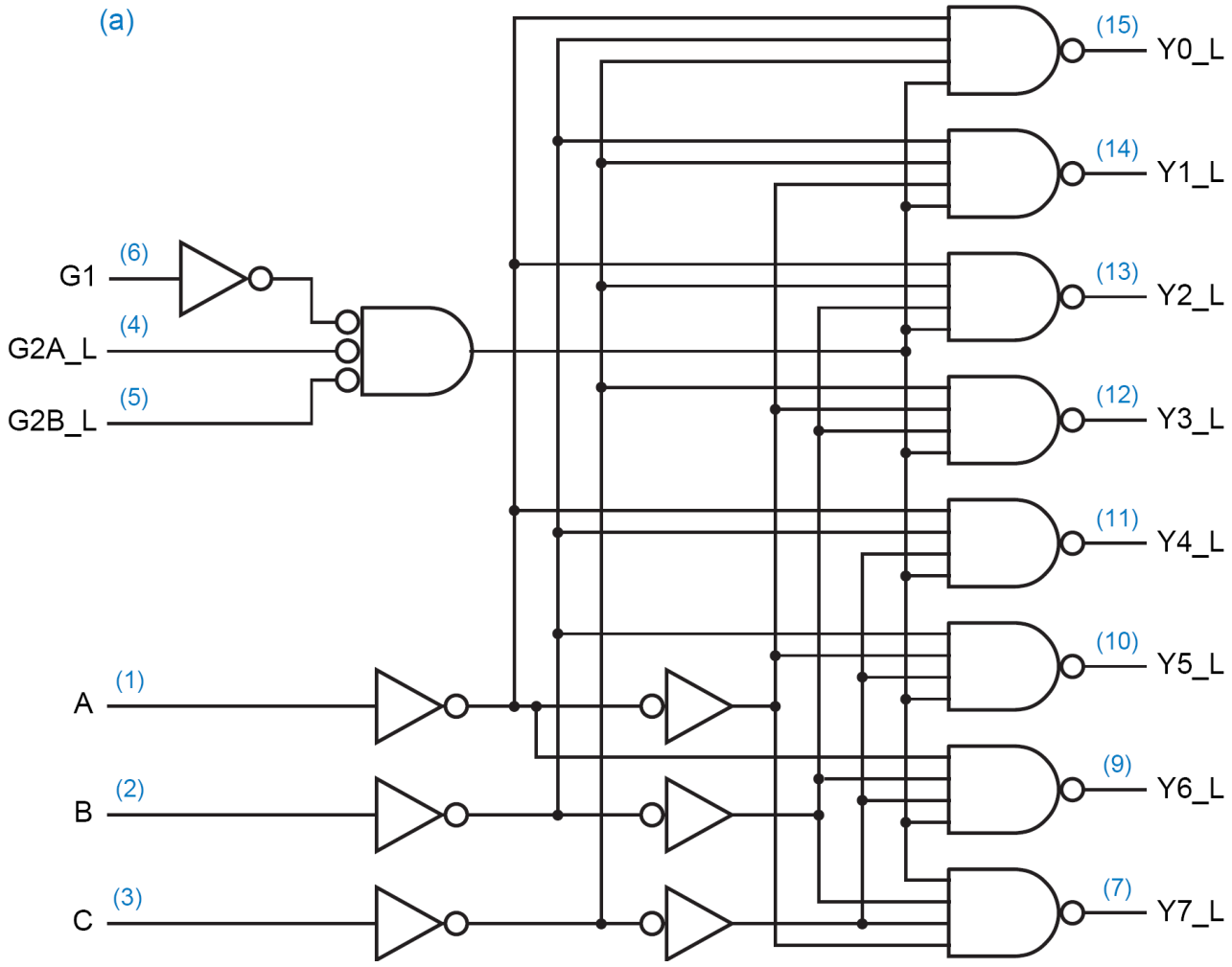

Application: Device Selection

- Normally, gate outputs cannot be tied together
  - Have to use tri-state buffers to do that
  - Have to make sure the buffers are not on simultaneously
  - Can use a decoder to control the buffers
- Example: a decoder and 8 tri-state buffers are used to share a single line among 8 devices
- The decoder guarantees that no two buffers are on simultaneously
- Some decoders have built-in tri-state outputs

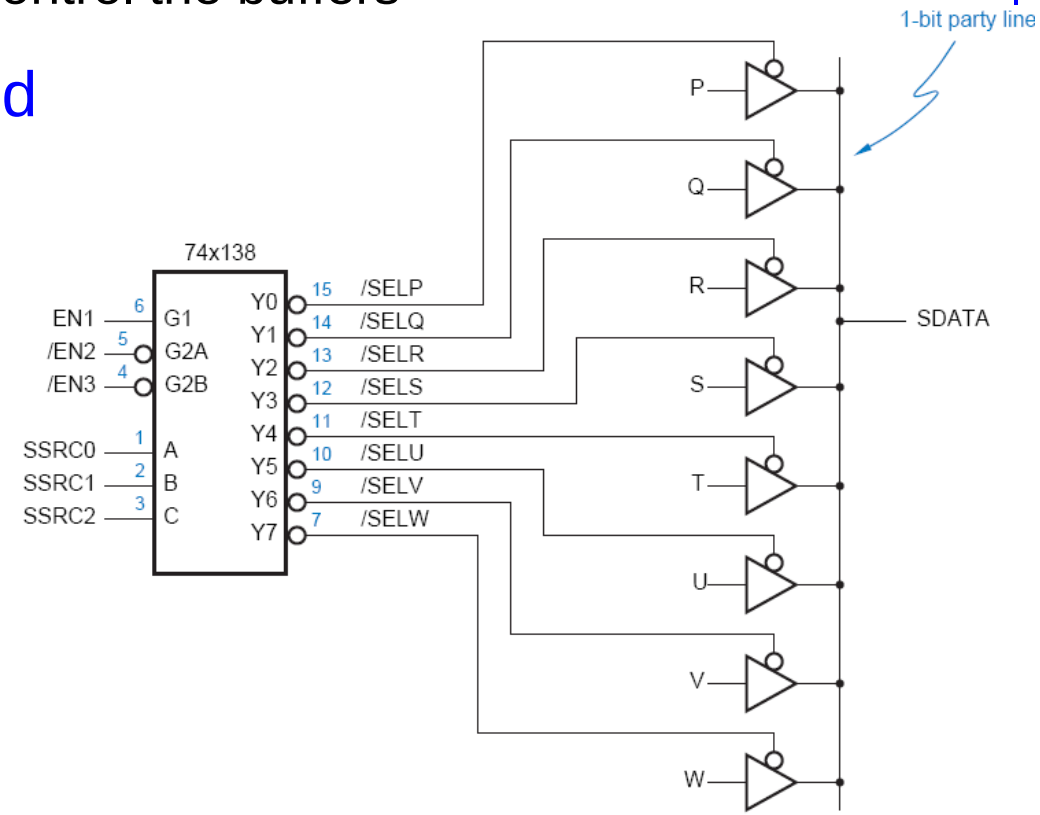

Larger Decoders?

- Can build a decoder by using smaller decoders
- Example: a 4-to-16 based on two 3-to-8 decoders

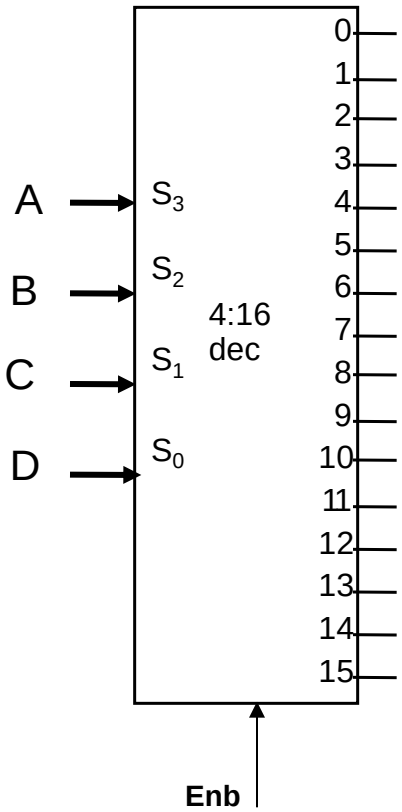

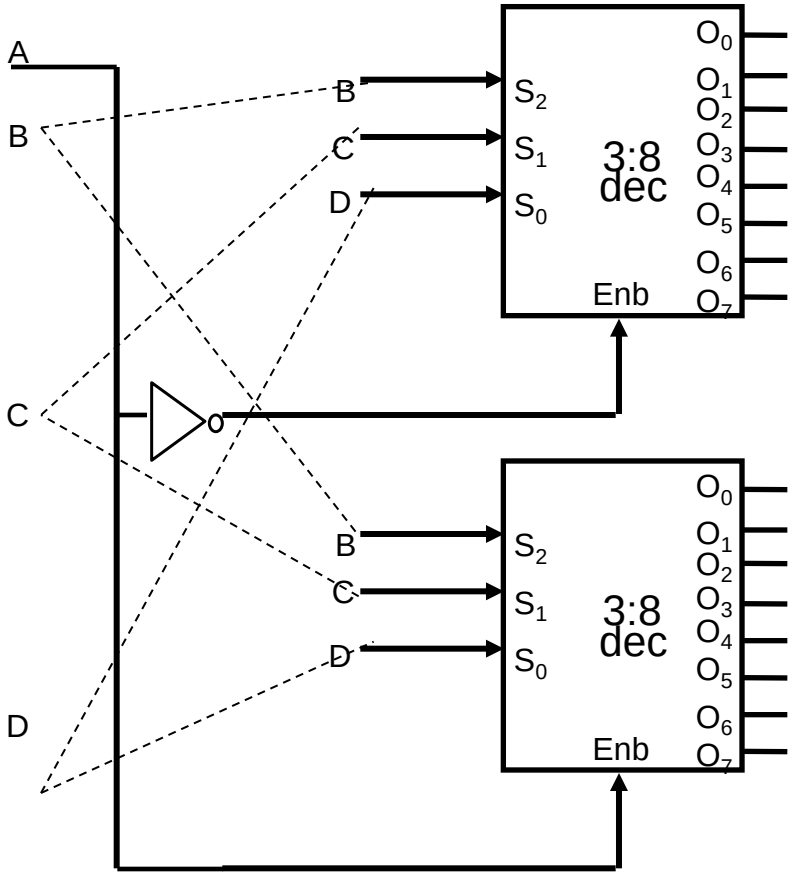

Decoders

- How to build a 5-32 decoder by using 4-16 and 2-4 decoders?

Decoders

- **Decoder: a more general term**
  - Our focus was on “binary decoders”

7-Segment Decoder

- **Seven-segment display:**
  - 7 LEDs (light emitting diodes), each one controlled by an input
  - 1 means “on”, 0 means “off”
  - Display digit “3”?
    - Set a, b, c, d, g to 1
    - Set e, f to 0

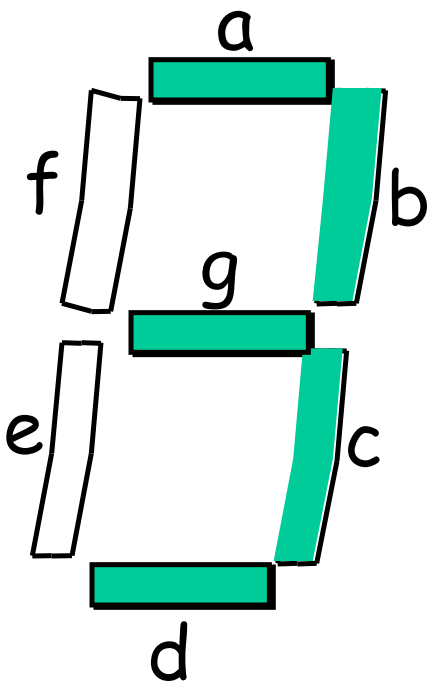

7-Segment Decoder

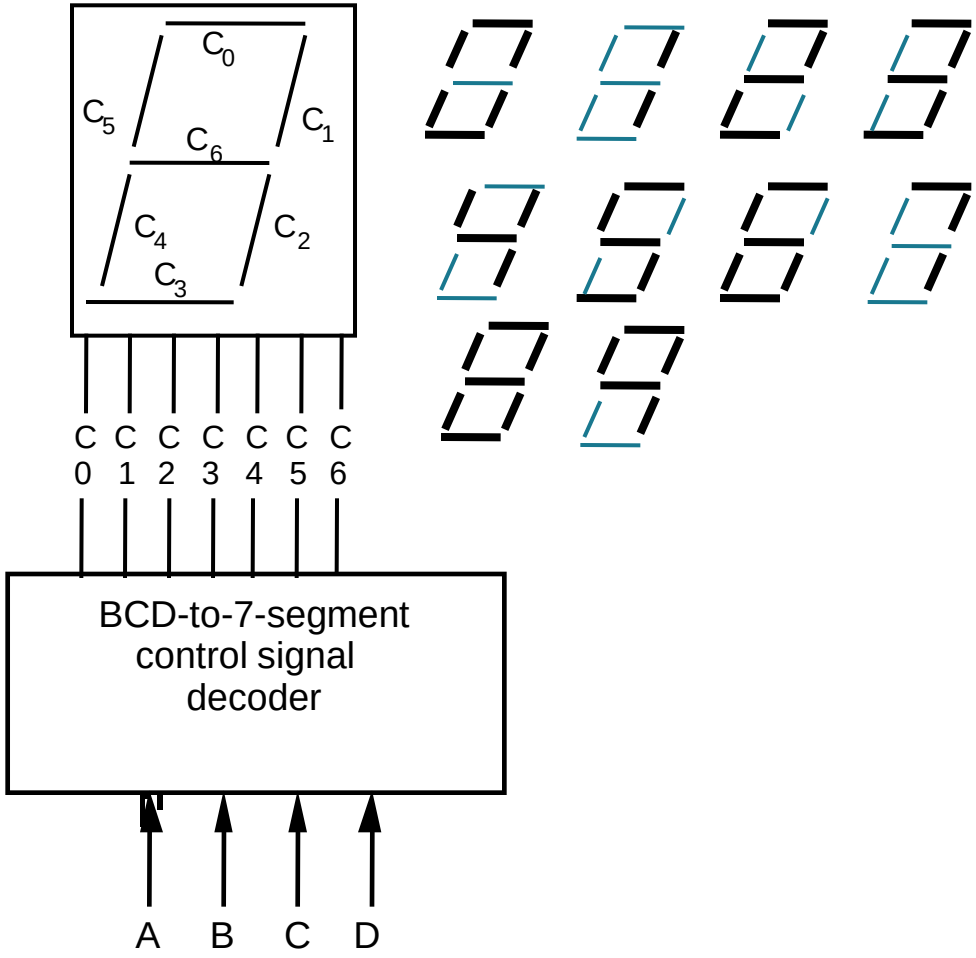

7-Segment Decoder

- **7-Segment Decoder:**
  - Input is a 4-bit BCD code → 4 inputs (A, B, C, D).
  - Output is a 7-bit code (a,b,c,d,e,f,g) that allows for the decimal equivalent to be displayed.
- **Example:**
  - Input: 0000_{BCD}
  - Output: 1111110 (a=b=c=d=e=f=1, g=0)

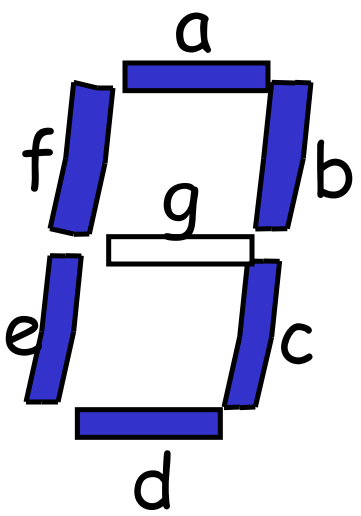

BCD-to-7Segment Truth Table

Digit	ABCD	abcdefg
0	0000	1111110
1	0001	0110000
2	0010	1101101
3	0011	1111001
4	0100	0110011
5	0101	1011011
6	0110	1011111
7	0111	1110000

Digit	ABCD	abcdefg
8	1000	1111111
9	1001	1110011
	1010	XXXXXXX
	1011	XXXXXXX
	1100	XXXXXXX
	1101	XXXXXXX
	1110	XXXXXXX
	1111	XXXXXXX

??

K-maps

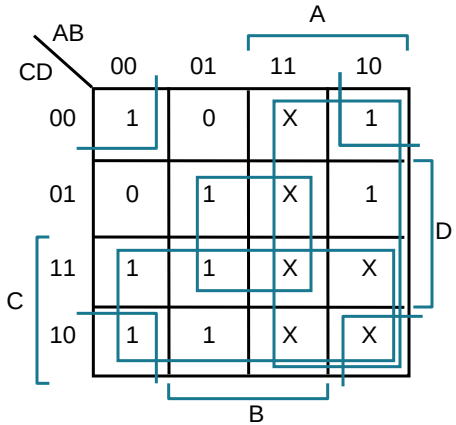

K-map for a

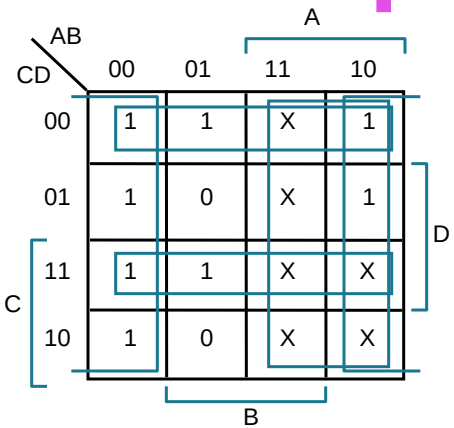

K-map for b

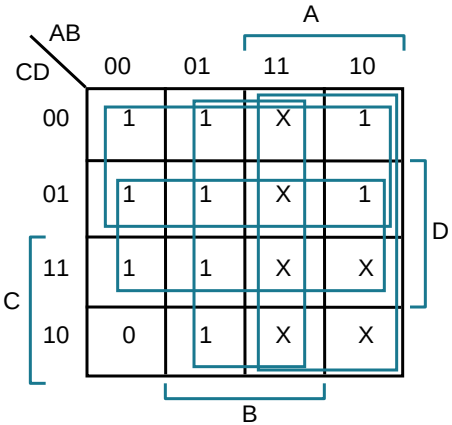

K-map for c

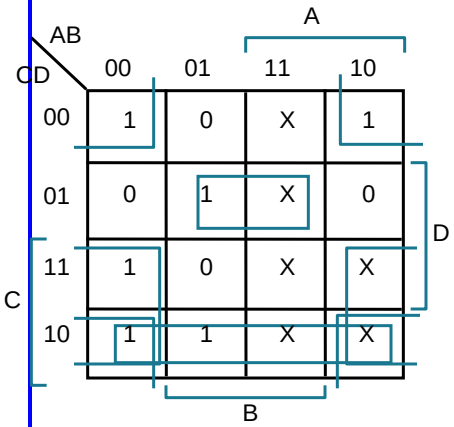

K-map for d

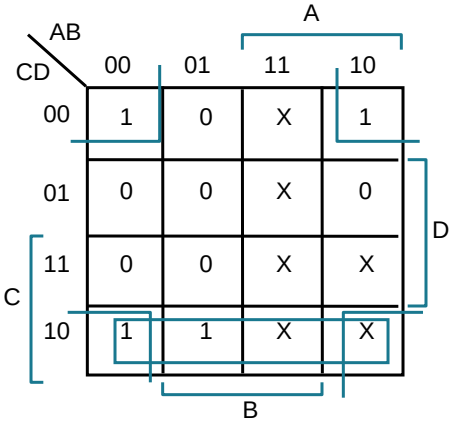

K-map for e

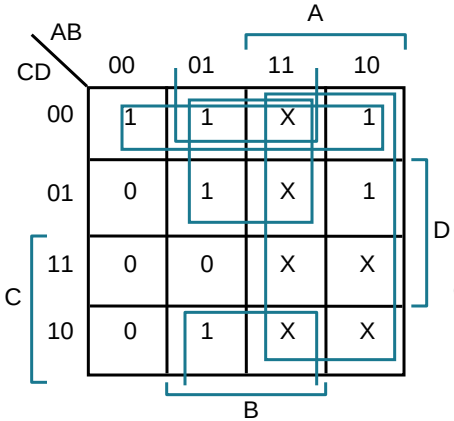

K-map for f

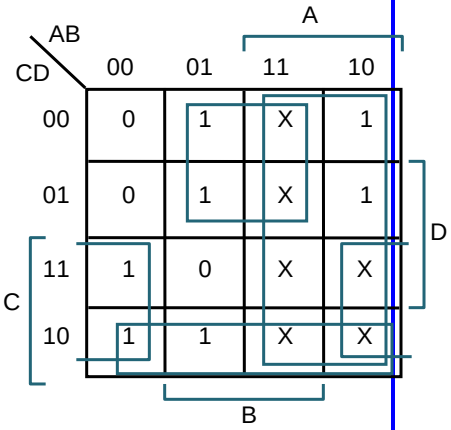

K-map for g

a = A + B D + C + B' D'
b = A + C' D' + C D + B'
c = A + B + C' + D

d = B' D' + C D' + B C' D + B' C
e = B' D' + C D
f = A + C' D' + B D' + B C'
g = A + C D' + B C' + B' C

Encoder

Encoder

- **Encoder:**
  - The reverse operation of a decoder
  - Has 2^n input lines and n output lines
  - The output lines generate the binary equivalent of the input line whose value is 1

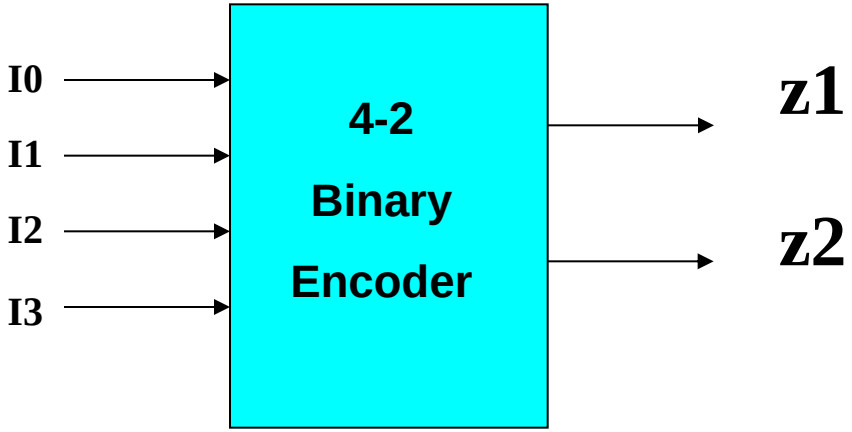

Encoder

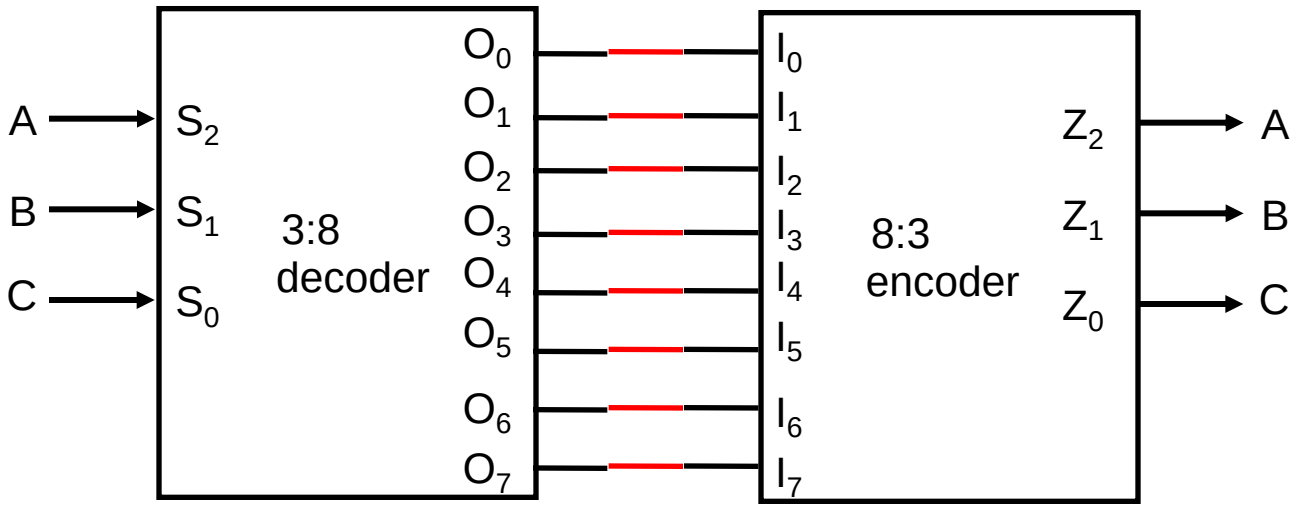
A
B
C
S_2
S_1
S_0
3:8
decoder
O_0
O_1
O_2
O_3
O_4
O_5
O_6
O_7
I_0
I_1
I_2
I_3
I_4
I_5
I_6
I_7
8:3
encoder
Z_2
Z_1
Z_0
A
B
C

Encoder Circuit Design

- **Example:**
  - 8-3 Binary Encoder

Inputs								Outputs		
D_7	D_6	D_5	D_4	D_3	D_2	D_1	D_0	A_2	A_1	A_0
0	0	0	0	0	0	0	1	0	0	0
0	0	0	0	0	0	1	0	0	0	1
0	0	0	0	0	1	0	0	0	1	0
0	0	0	0	1	0	0	0	0	1	1
0	0	0	1	0	0	0	0	1	0	0
0	0	1	0	0	0	0	0	1	0	1
0	1	0	0	0	0	0	0	1	1	0
1	0	0	0	0	0	0	0	1	1	1

$$A_0 = D_1 + D_3 + D_5 + D_7$$
$$A_1 = D_2 + D_3 + D_6 + D_7$$
$$A_2 = D_4 + D_5 + D_6 + D_7$$

Encoder Circuit

With Enable

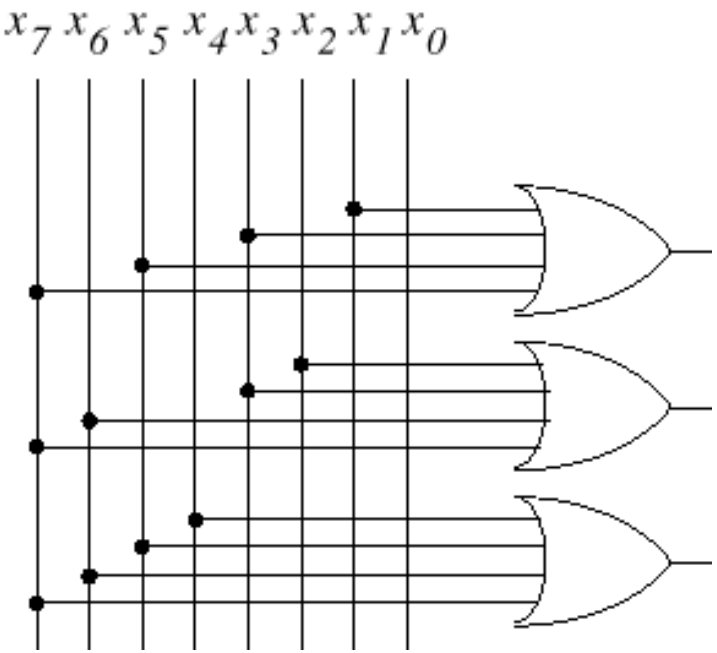

With Acknowledge

Application

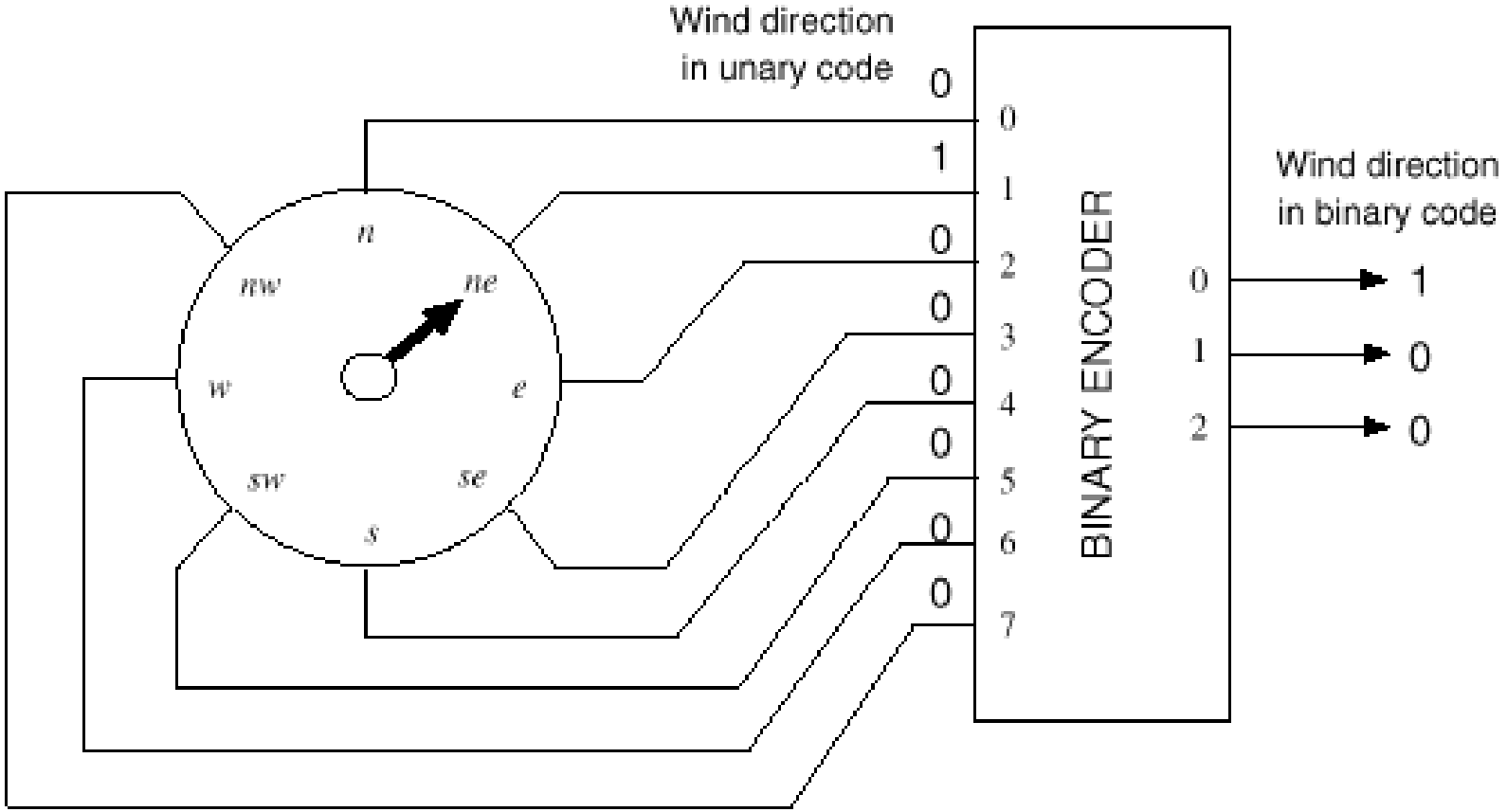

The number of inputs: large

→ fewer lines

Encoder Design Issues

- The previous design has a major problem:
  - Only one input can be active at any given time
  - If two inputs are active simultaneously, the output produces an undefined combination
    - (for example, if D_3 and D_6 are 1 simultaneously, the output of the encoder will be 111.

$$A_0 = D_1 + D_3 + D_5 + D_7$$
$$A_1 = D_2 + D_3 + D_6 + D_7$$
$$A_2 = D_4 + D_5 + D_6 + D_7$$

May still be fine in particular applications! Example: next slide

Encoder Application Example

- Multiple contestant switch board
- Contestants have to push their buttons if they know the answer
- The winner's number will be shown
- One input from each contestant to the encoder
- Problems: too many inputs, small chance for simultaneous pushes

Priority Encoder

- Multiple asserted inputs are allowed; one has priority over all others.

Inputs				Outputs		
D_3	D_2	D_1	D_0	A_1	A_0	V
0	0	0	0	X	X	0
0	0	0	1	0	0	1
0	0	1	X	0	1	1
0	1	X	X	1	0	1
1	X	X	X	1	1	1

K-Maps

D_3D_2 \ D_1D_0	00	01	11	10
00	X			
01	1	1	1	1
11	1	1	1	1
10	1	1	1	1

D_1 D_2 D_3 D_0

$A_1 = D_2 + D_3$

D_3D_2 \ D_2D_0	00	01	11	10
00	X		1	1
01				
11	1	1	1	1
10	1	1	1	1

D_1 D_2 D_3 D_0

$A_0 = D_3 + D_1\overline{D}_2$

Circuit

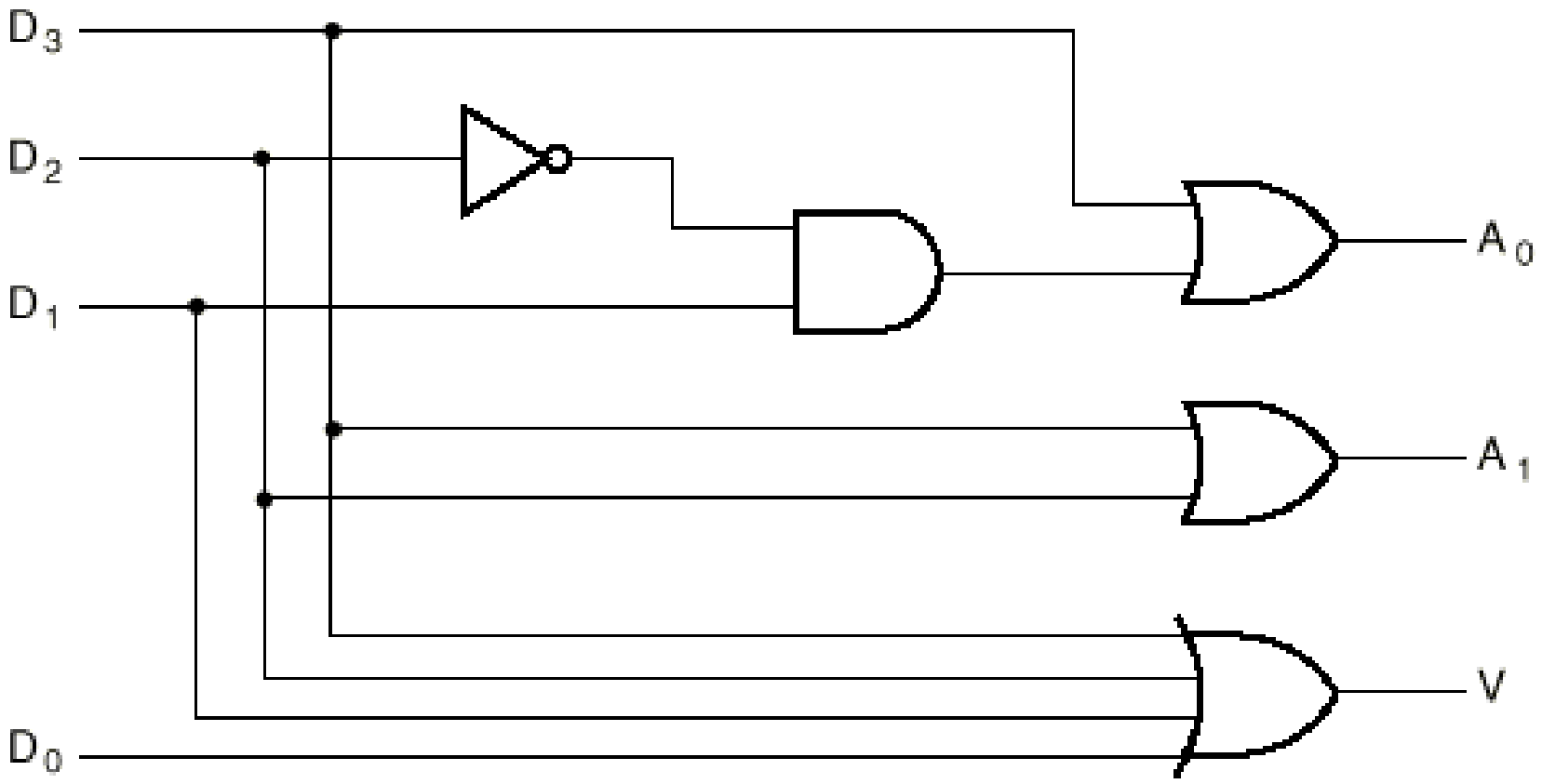

8-3 Priority Encoder

A_0	A_1	A_2	A_3	A_4	A_5	A_6	A_7	Z_0	Z_1	Z_2	NR
0	0	0	0	0	0	0	0	X	X	X	1
X	X	X	X	X	X	X	1	1	1	1	0
X	X	X	X	X	X	1	0	1	1	0	0
X	X	X	X	X	1	0	0	1	0	1	0
X	X	X	X	1	0	0	0	1	0	0	0
X	X	X	1	0	0	0	0	0	1	1	0
X	X	1	0	0	0	0	0	0	1	0	0
X	1	0	0	0	0	0	0	0	0	1	0
1	0	0	0	0	0	0	0	0	0	0	0

Priority Encoder: Application

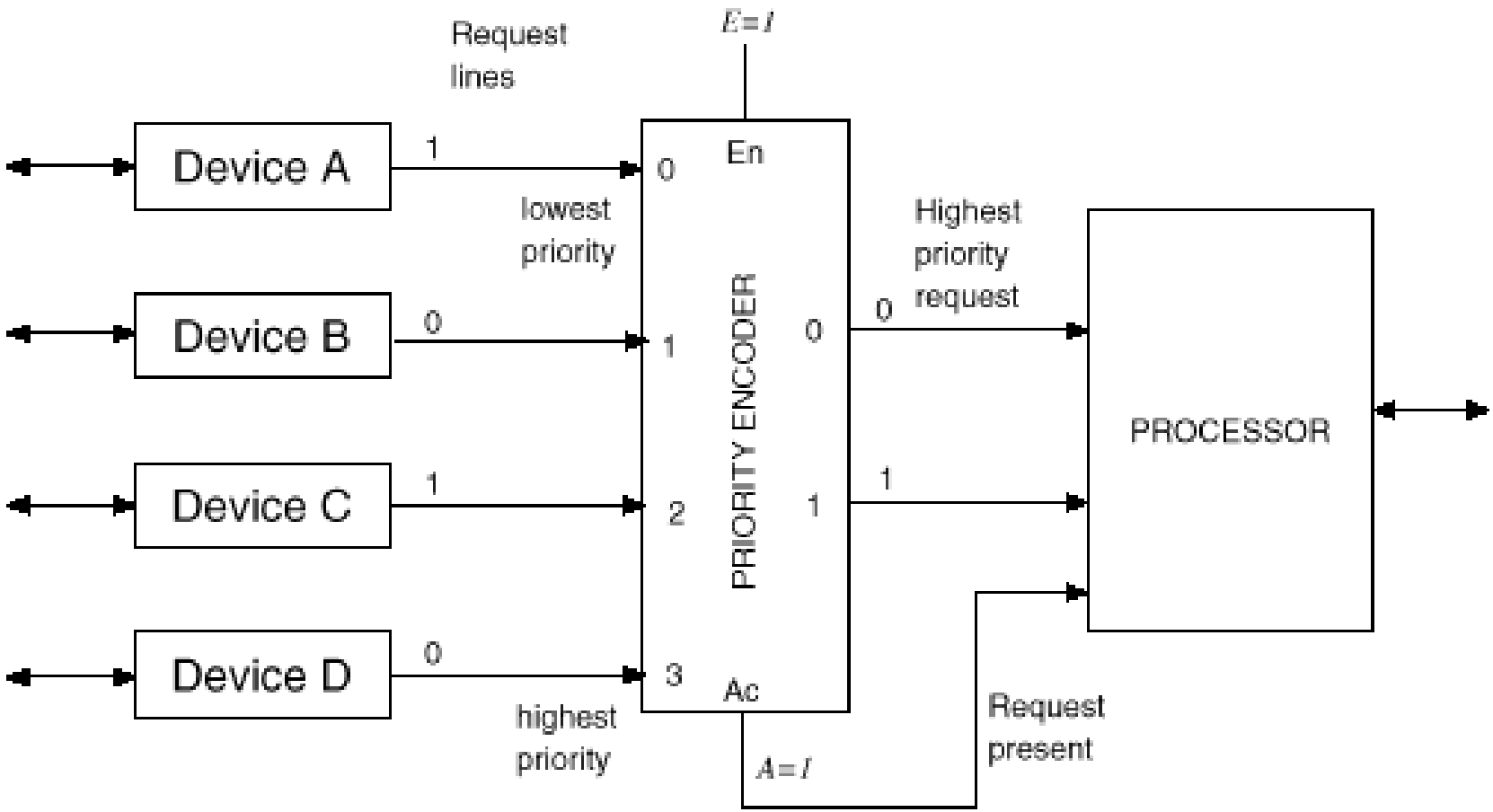

74x148

- **Features:**
  - Inputs and outputs are active low
  - EI must be asserted for any of its outputs to be asserted
  - GS is asserted when the device is enabled and one or more of the request inputs is asserted (“Group Select” or “Got Something”)
  - EO is an enable output designed to be connected to the EI input of another ’148 that handles lower-priority requests
    - It is asserted if EI is asserted but no request input is asserted; thus, a lower-priority ’148 may be enabled

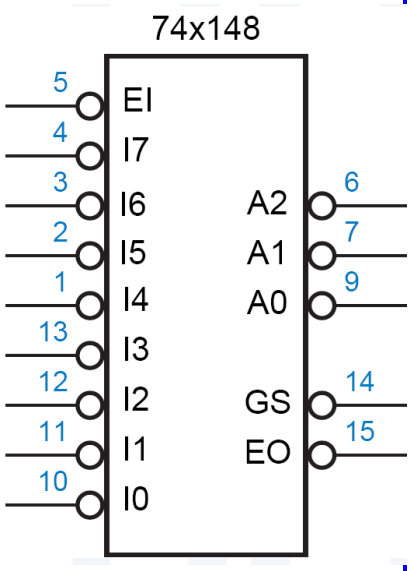

74x148 Truth Table

Inputs									Outputs				
/EI	/I0	/I1	/I2	/I3	/I4	/I5	/I6	/I7	/A2	/A1	/A0	/GS	/EO
1	x	x	x	x	x	x	x	x	1	1	1	1	1
0	x	x	x	x	x	x	x	0	0	0	0	0	1
0	x	x	x	x	x	x	0	1	0	0	1	0	1
0	x	x	x	x	x	0	1	1	0	1	0	0	1
0	x	x	x	x	0	1	1	1	0	1	1	0	1
0	x	x	x	0	1	1	1	1	1	0	0	0	1
0	x	x	0	1	1	1	1	1	1	0	1	0	1
0	x	0	1	1	1	1	1	1	1	1	0	0	1
0	0	1	1	1	1	1	1	1	1	1	1	0	1
0	1	1	1	1	1	1	1	1	1	1	1	1	0

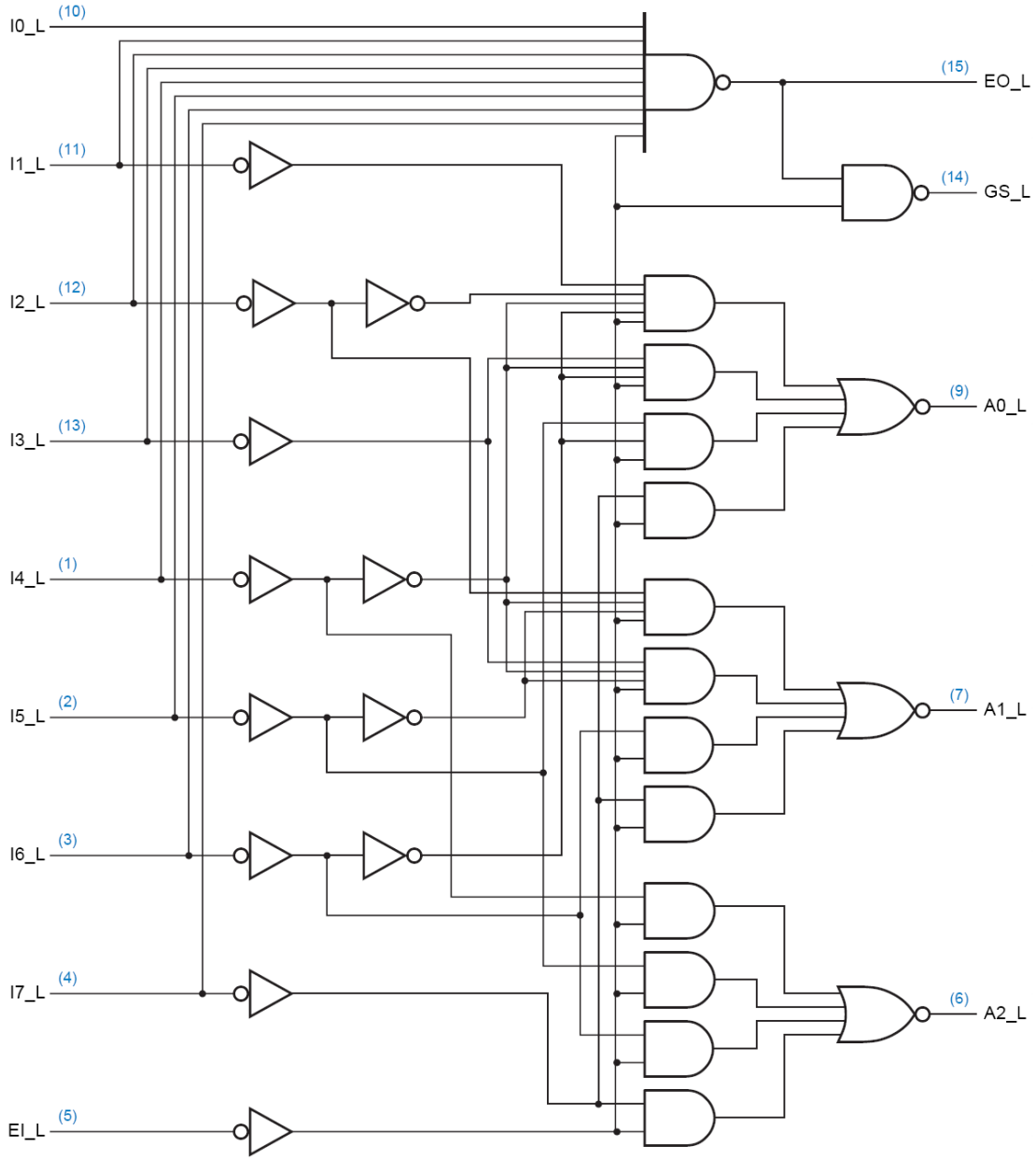
I0_L
(10)
I1_L
(11)
I2_L
(12)
I3_L
(13)
I4_L
(1)
I5_L
(2)
I6_L
(3)
I7_L
(4)
EI_L
(5)
(15)
EO_L
(14)
GS_L
(9)
A0_L
(7)
A1_L
(6)
A2_L